..... 1
..... 1
..... 2
..... 2
..... 3
..... 4
..... 5
..... 6
..... 6
..... 7
..... 8
..... 9
..... 10
..... 11
..... 13
..... 15
..... 15
..... 16
..... 16
..... 17
..... 19

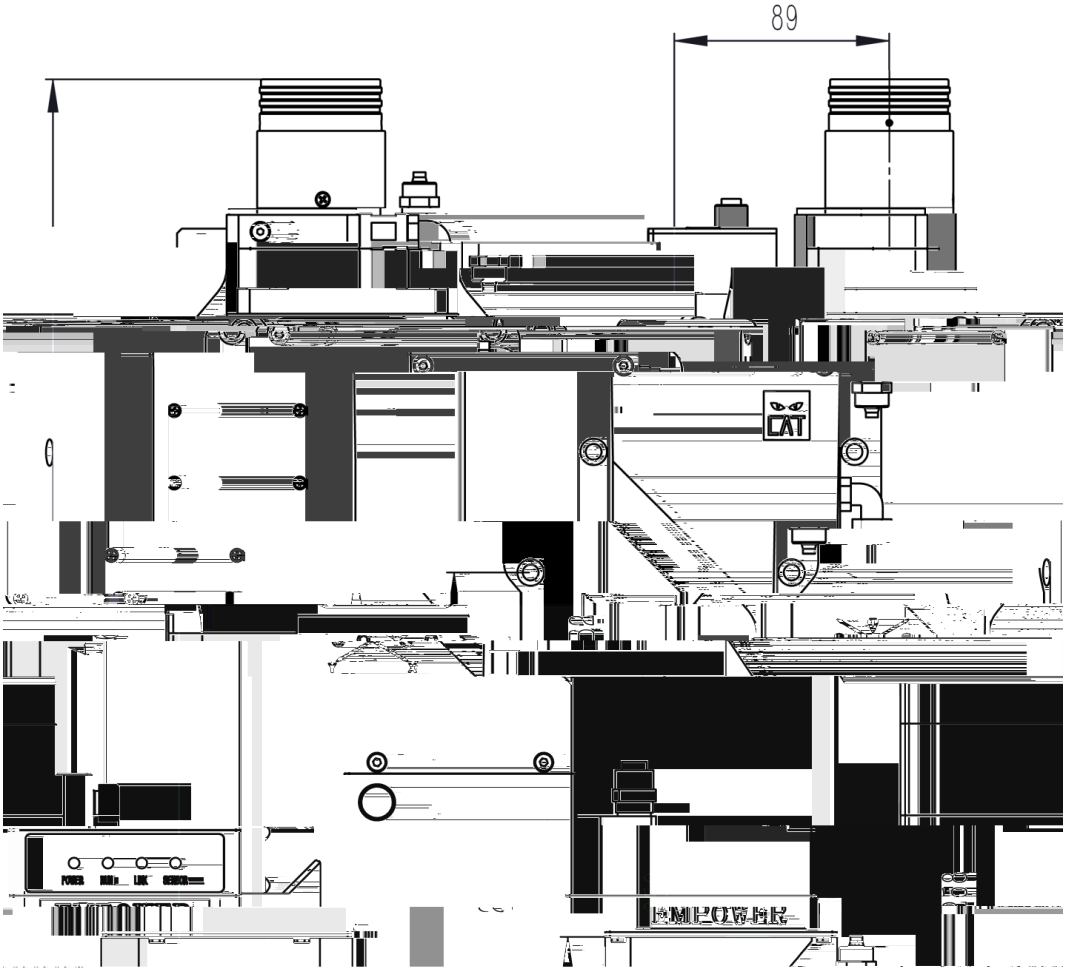
89
POWER
LAT
EMPOWER

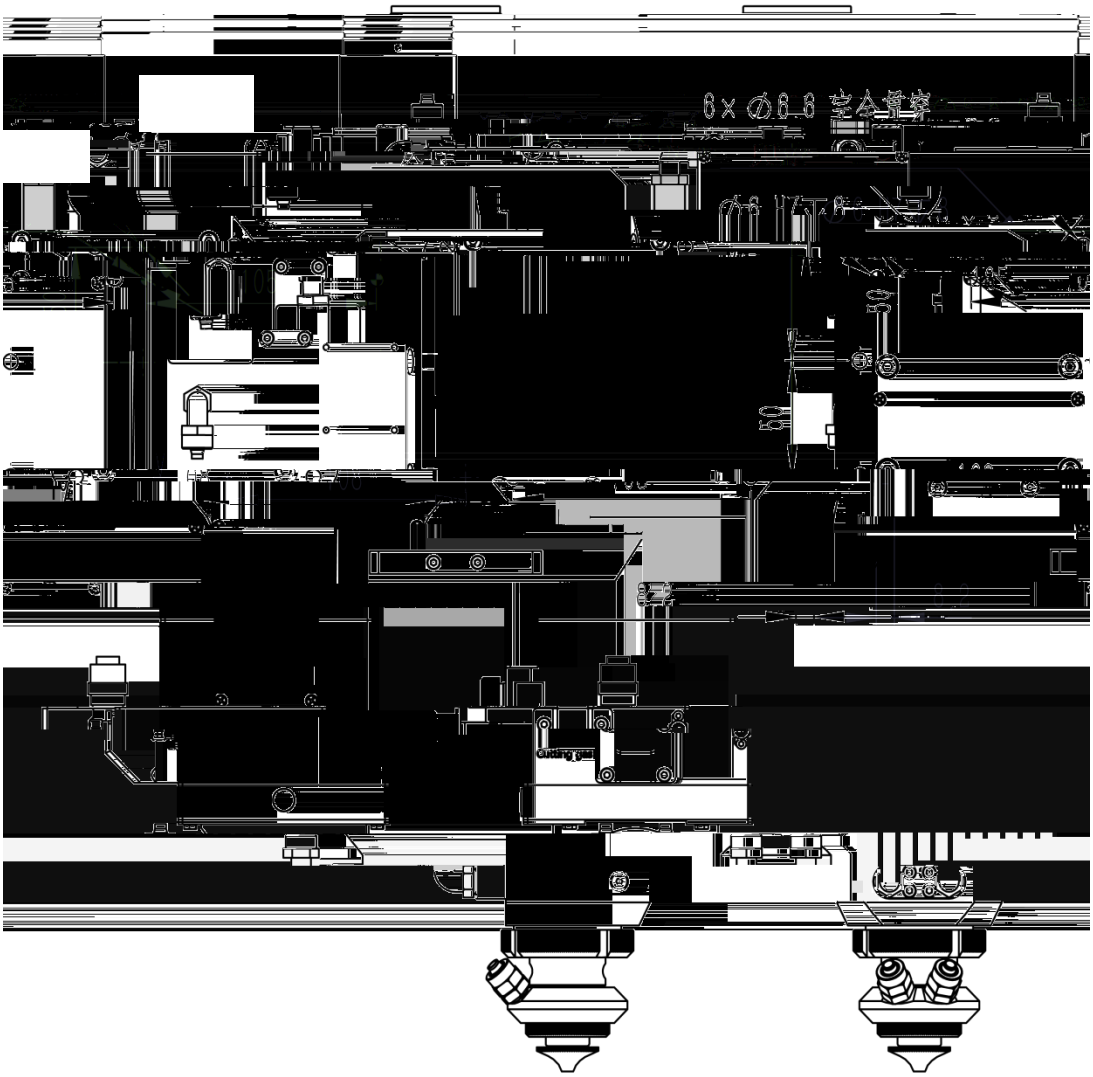
6x ∅6.6 空公差穿

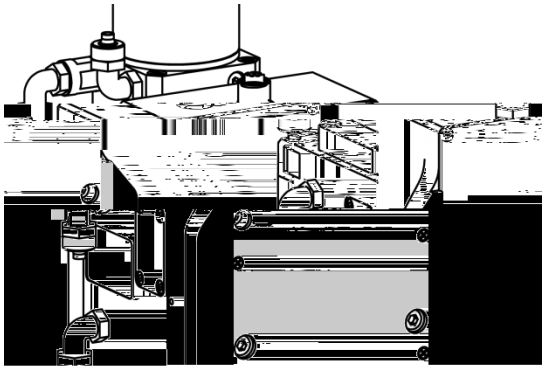

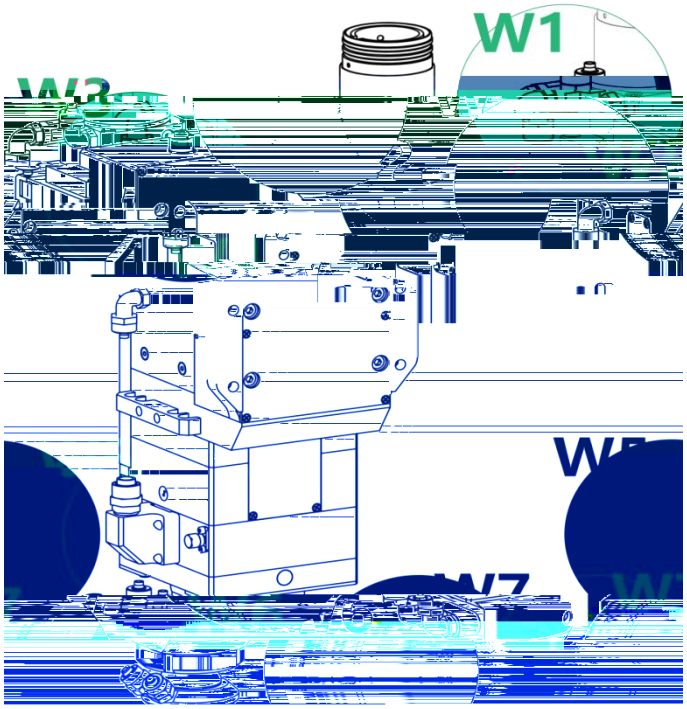
W1

	≤

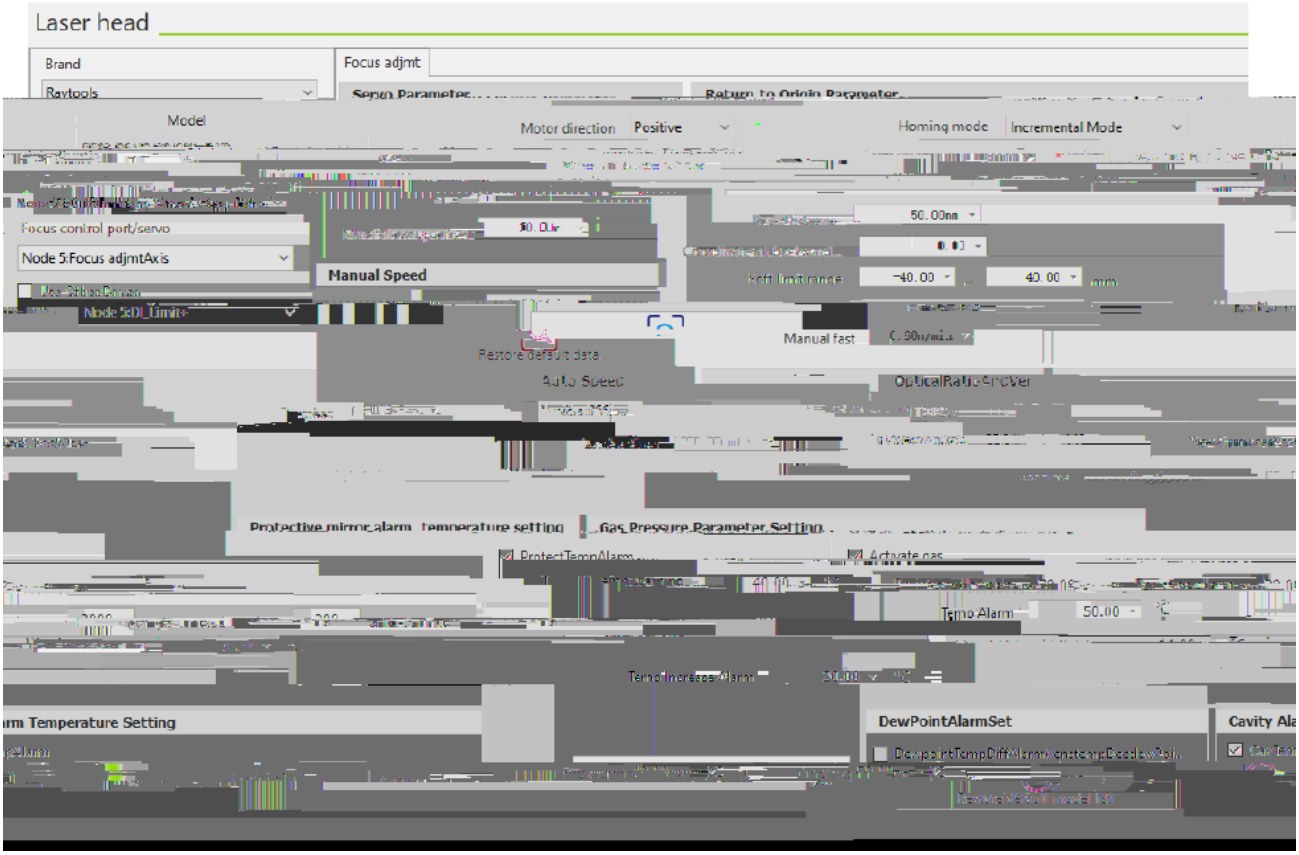
Laser head
Brand
Raytools
Focus adjmt
Model
Motor direction
Positive
Homing mode
Incremental Mode
Focus control port/servo
Node 5:Focus adjmtAxis
Manual Speed
Manual fast
Restore default data
Auto Speed
Protective mirror alarm temperature setting
Gas Pressure Parameter Setting
Temp Alarm
50.00
DewPointAlarmSet
Cavity Ala

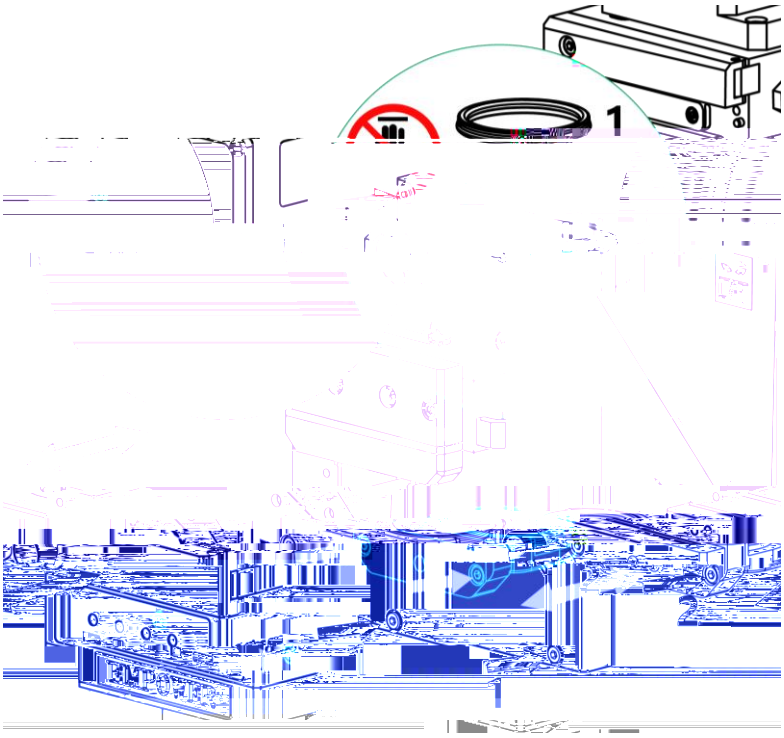
1